Challenge us to make a positive impact on your business.

BMI installs,inc.

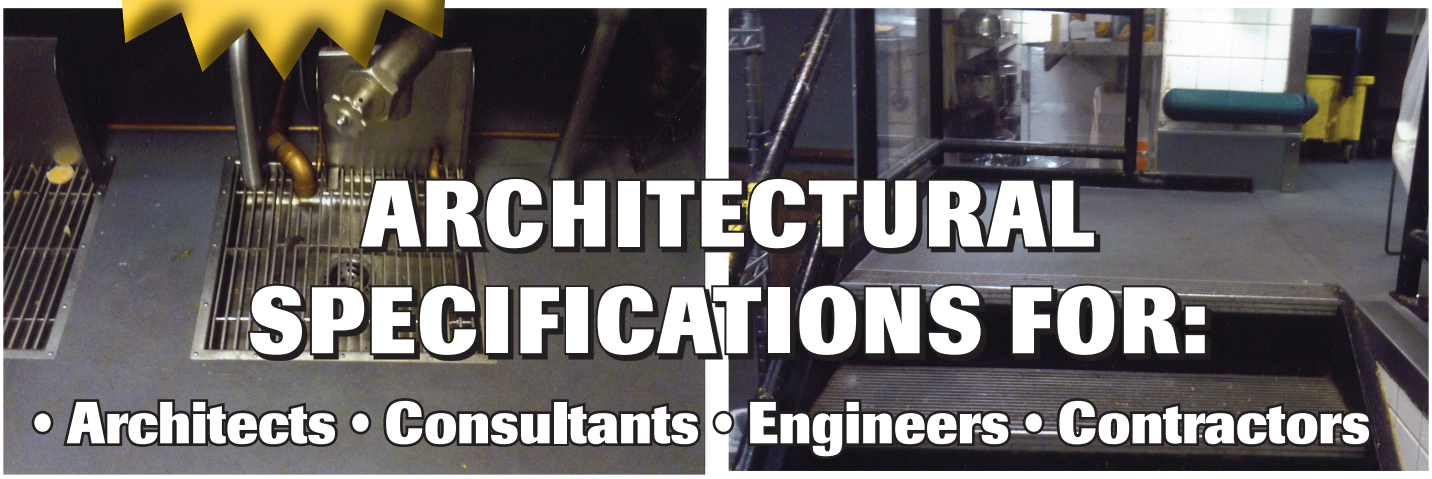

ARCHITECTURAL SPECIFICATIONS FOR:

• Architects • Consultants • Engineers • Contractors

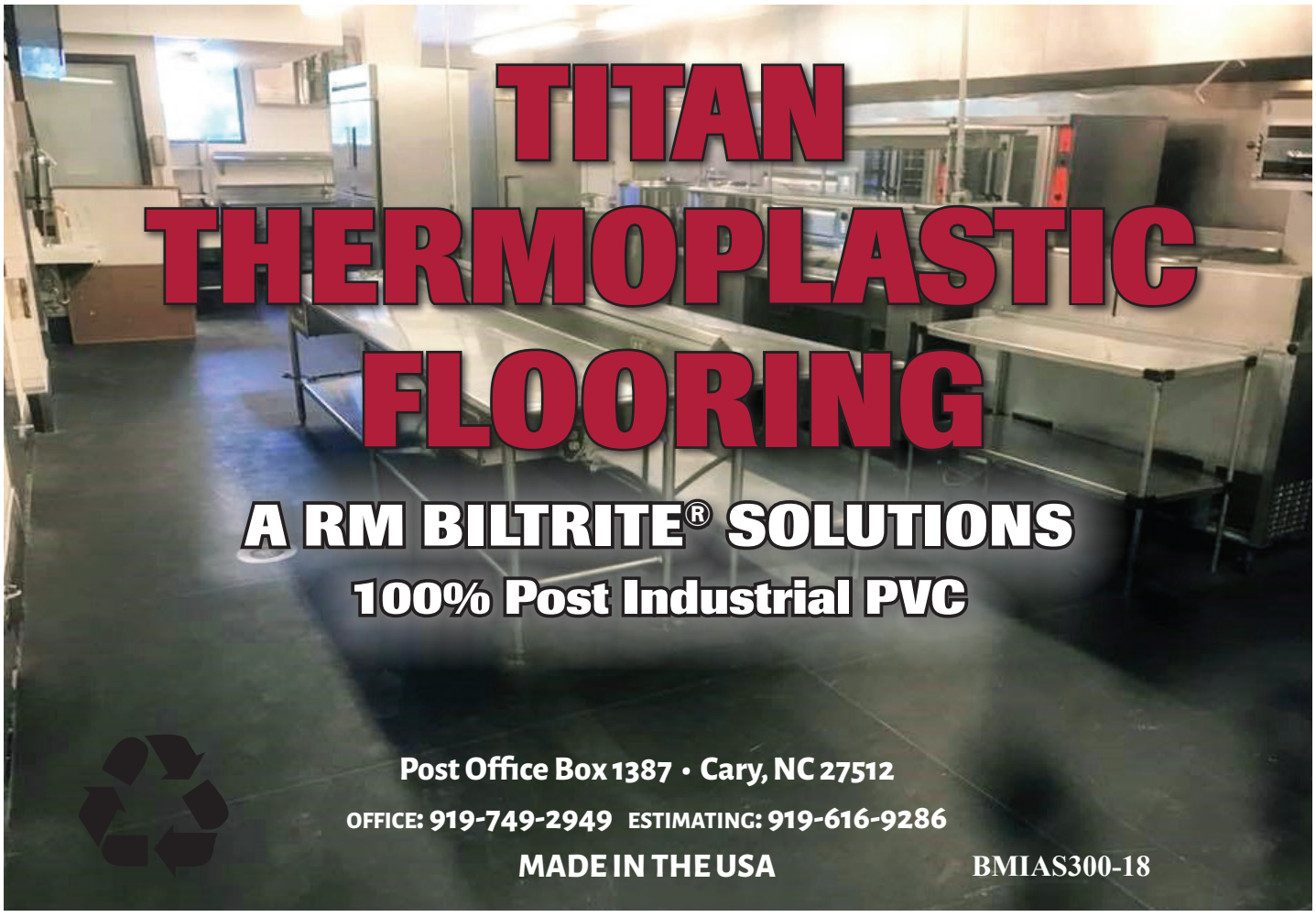

TITAN THERMOPLASTIC FLOORING

A RM BILTRITE® SOLUTIONS

100% Post Industrial PVC

Post Office Box 1387 • Cary, NC 27512

OFFICE: 919-749-2949 ESTIMATING: 919-616-9286

MADE IN THE USA

BMIAS300-18

ARCHITECTURAL SPECIFICATIONS

BMI INSTALLS, INC. TUFF-TRAC® TITAN THERMOPLASTIC FLOORING SLIP RESISTANT SAFETY SHEET FLOORING SYSTEM

FOR COMMERCIAL KITCHEN, BAR AND COOLER APPLICATIONS

PART I – GENERAL

DESCRIPTION

This section specifies Tuff-Trac® Titan Thermoplastic Flooring product and includes the following:

1. Submittals
2. Quality Assurance
3. Project Condition Requirements
4. Resilient Floor Covering Product Specifications
5. Installation Accessories
6. Site Inspection Guidelines
7. Product Installation Procedures
8. Product Cleaning and Maintenance Procedures

SUBMITTALS

A. Product data per individual product specified.
   1. Certification that products supplied for installation comply with local regulatory guidelines will be supplied by BMI. Since requirements may vary by state or county: please contact BMI for clarification. (919) 740-2949.

B. Blueprint indicating locations of columns, doorways, partitions, enclosures, built-in cabinets, and any area requiring cutouts in flooring materials is to be supplied by the project architect.

C. BMI will provide product samples for characteristic variations in the form of 4" x 4" square tiles for verification purposes.

QUALITY ASSURANCE

A. Installer Certification Requirements: BMI maintains that a minimum of two years on-site training in heat-welding, custom base production, drain securement, personnel management, finances and four years of high school are required to earn installation certification.

B. Single-Source Responsibility: To obtain the Tuff-Trac® Titan Thermoplastic Flooring products supplier has been determined to possess adequate resources necessary to provide quantity, consistency and quality requirements in both appearance and physical properties without delay of project scheduling and/or deadline.

C. Fire Performance Characteristics: Provided floor coverings with the following fire performance characteristics as determined by testing products per ASTM test method indicated by Underwriters Laboratories, Inc. (UL) or another testing and inspection agency acceptable to authorities having jurisdiction.

Absorption loss	0.20 grams	
Bacteria and Mildew Resistance	Excellent	ASTM G-21
Coefficient of Friction (Slip Resistance) avg.		
Wet .88[c]	Dry .92[c]	ASTM D-2047
Compressive Strength	685 PSI	ASTMD-695
Elongation	75% min.	ASTM D-412
Embossing	Face=Stipple	Back=Cloth

Fire Test (NFPA Type 1 Rated)		
Critical Radiant Flux	1.05 watts/cm^2	ASTM E-648
Burn Distance	12 cm	ASTM E-648
Resistivity (ohm-cm)	4.9 x 10^9	ASTM C-657
Shore "A" Hardness	90+/- 5	ASTM C-657
Tensile Strength (md)	1000 PSI (min) 1.	ASTM D-412
Thermal Expansion	15.4 x 10^{-6}	ASTM E-831
Thickness	.250 inches	ASTM D-751
Weight (oz./sq. ft.)	27.15	ASTM D-751

[a]md=machine direction

[b]cmd=cross machine direction

[c]coefficient of friction (slip resistance) measured on a scale of .00 to 1.00. OSHA regulations require minimum of .50 wet or dry. ADA regulations require minimum of .60 we or dry. At .88 wet and .92 dry the Slip Resistant Safety Floor has a substantially greater degree of coefficient of friction (slip resistance) than is required by either OSHA or ADA.

PRODUCT DELIVERY, STORAGE, AND HANDLING

A. All floor covering products and accessories shall be delivered directly to the project site and clearly labeled to include:
   1. BMI
   2. Product identification
   3. Project, site destination for delivery
   4. Shipping and Handling instruction

B. Materials are to be stored in the following manner
   1. Storage area is to be dry and protected from the elements
   2. Ambient temperature must be maintained between 70 and 90 degrees Fahrenheit.
   3. **Under no circumstances is the construction company to store products and materials in an area exposed to rain, snow or the elements. NO EXCEPTIONS WILL BE MADE. BMI is not responsible for product damage or losses incurred due to inadequate storage conditions.**

PROJECT CONDITIONS

A. Areas to be installed must maintain a minimum temperature of 70 degrees Fahrenheit both 24 hours prior to and 24 hours following installation of Tuff-Trac® Titan Thermoplastic Flooring materials.

B. Installation of flooring materials will not commence until said materials have acclimated to the same temperature as the area to be installed. This should be taken into consideration when choosing where to store flooring material and related accessories.

C. Areas to be installed are to be closed to traffic during installation of flooring materials. They are operable as soon as the installation crew has completed and vacated the scheduled area.

CONSTRUCTION SEQUENCING AND SCHEDULING

A. Floor covering installation will commence only upon the completion of other "finishing" operations. This includes; drain work, wall construction, wiring, painting and FRP installation. NO EXCEPTIONS WILL BE MADE.

B. Floor covering installation will commence over concrete slabs only when slab is determined to be fully cured and sufficiently free of moisture (dry) to insure proper bonding between adhesives, substrate and materials to be installed. (As set forth by BMI recommended bond and moisture testing requirements).

PART II - PRODUCTS

MANUFACTURER/CONTRACTOR INFORMATION:

A. All products incorporated in an installation of Tuff-Trac® Titan Thermoplastic Flooring are subject to compliance with floor covering requirements as provided by BMI Tel: (919) 740-2949.

B. THERMOPLASTIC WELDING ROD AND ADHESIVES supplied by BMI.

RESILIENT FLOOR COVERING INFORMATION:

A. Resilient Floor Covering: Is manufactured from 100% recycled thermoplastic polyvinyl chloride, interlaced with strand reinforcements, cohesive fibers and a micro biocide.

B. Sheet PVC Floor Coverings: Tuff-Trac® Titan Thermoplastic Flooring material in 5'X8' dimensions and ¼" thick shall be provided to the client. Top surface pattern to be (Stipple) Finish back (Cloth). Color to be dark gray.

C. Wall Base/Inside and Outside Corners will be custom fabricated on site using the Tuff-Trac® Titan Thermoplastic Flooring material. Wall Base/Corners to be a minimum height of six (6) inches.

INSTALLATION ACCESSORIES

A. Concrete Slab Primer: Non-staining as recommended by BMI for new construction and installation on second level floors.

B. Trowel Application Underlayments and Patching Compounds: CementAll® is a rapid setting cement base concrete 1 hour 3000 psi; 3 hours 5000 psi, Latex-modified Portland-cement based formulation provided and approved by BMI for installations indicated. Other NSE products must be approved by BMI prior to installation.

C. Adhesives (Cements): Stabilized water-resistant Two-part Epoxy as recommended by BMI for floor covering products and substrates indicated. A Fast Curing Polyurethane Adhesive as recommended by BMI for application of Wall Board (Cove Base). A non-sagging, high performance industrial adhesive as recommended by BMI for application along top of Aluminum Edge Flashing (Cove Cap).

D. New Thermoplastic Welding Rod: In 2008 the "V" Rod was introduced making it 3.72 times stronger than any of our competitors welding rod. In February of 2010 we launched the new Thermoplastic rod with a redesigned shape that doubles the strength of the "V" rod technology. We now have a rod that is over 7 times stronger then the industry standard. This new technology completely eliminates seam splits due to expansion and contraction and will extend the life of our Safety Floor System by up to 15 years.

E. Aluminum Edge Flashing (Cove Cap) Manufactured from extruded .050 gauge, aluminum with mill finish of width and height required to adequately protect edge of floor covering surfaces. These are installed in maximum available length to minimize visible joints. Installed using stainless steel screws. (See Installation Procedures).

F. Stainless Steel Drain Rings/Trough Drain Rings/Corner Angle Guards: Manufactured from .060 16 gauge, Stainless Steel with countersunk screw holes. Square drain rings to have rounded corners. All drain rings to be one piece construction and absent of any welds and joints. Installed using stainless steel screws and solid lead anchors. (See BMI Installations).

G. Transition Strips: Manufactured from .105/2 14 gauge, Stainless Steel with countersunk screw holes. Installed using stainless steel screws and solid lead anchors. (See BMI Installations).

PART III-EXECUTION

EXAMINATION

A. General: Examine areas where Tuff-Trac® Titan Thermoplastic Flooring installation will occur. Construction Superintendent shall be present to verify substrates and site conditions are in compliance with requirements of BMI (See New Construction Checklist).

B. Concrete Sub-floors:

1. Verification that slab substrate is dry and free of curing compounds, sealers, hardeners, or other materials interfering with bonding of adhesive to substrate material. Adhesion and dryness characteristics are confirmed by performing bond and moisture tests recommended by BMI.
    a. Sub-Floor finishes must comply with tolerances and other stipulations as specified in New Construction Checklist.
    b. Sub-Floors are to be free of cracks, ridges, depressions, scale and foreign deposits of any kind.
2. Wood Sub-floors:
    a. Wood underlay installed over substrate materials must comply with specified requirements of BMI ONLY kiln dried OSB plywood may be utilized.
    Underlays are to be secured with 2 ½" galvanized screws. **NO EXCEPTIONS WILL BE MADE.**
    b. Underlay surfaces are to be free of irregularities and foreign materials potentially interfere with adhesive bonding, may stain installed floor coverings or be visible through flooring surface.

PREPARATION

A. General: Complies with BMI installation specifications to preparing substrate materials indicated for install of Tuff-Trac® Titan Thermoplastic Flooring. (See New Construction Checklist).

B. Use trowel application leveling and patching compounds meeting requirements of BMI for direction of crack fillings, holes and depressions in concrete substrate.

C. Substrate Coating Removal: all curing compounds, detergents, wax, oil, grease, silicone or other substances incompatible with adhesive bonding are to be removed. This may be performed with terrazzo or concrete grinder, a drum sander, or polishing machine equipped with a heavy-duty wire brush attachment.

D. Substrates to be installed with Tuff-Trac® Titan Thermoplastic Flooring must be cleaned immediately before installation commences. This should be performed with a broom or heavy shop vacuum. Following this cleaning; substrate should again be examined to determine an absence of visual evidence indicating moisture, alkaline salts, carbonation, or dust.

E. All round, square and trough drains to be set 1/8" above substrate. (See New Construction Checklist).

F. All sink drains to be set according to local codes. (See New Construction Checklist).

INSTALLATION

A. General: Project Site must comply with BMI installation instructions for preparation and approval as indicated in manual under installation procedures.

B. Floor coverings are initially dry-laid in compliance with the following conditions:
    1. Maintaining directional uniformity of Tuff-Trac® Titan Thermoplastic Flooring.
    2. Sheets are arranged allowing the minimum number of necessary seams to install material. When allowed, seams are placed inconspicuously and outside of high traffic areas. In no case are seams placed within less than 6" of parallel joints in flooring and/or substrates.
    3. All floor coverings edges will be uniform in color and pattern at seams.
    4. Cross seams are avoided.

C. Floor coverings installation should be complete prior to installation of movable partitions, stationary heavy equipment (i.e. walk-in coolers, cook lines, etc.) or other items on the job site.
D. Floor coverings will be scribe, cut and fitted to all vertical surfaces, permanent fixtures, and built-in furniture, cabinets, pipes, outlets, edgings, thresholds, and connections.
E. Floor coverings are extended into toe spaces, door releases, closets, or similar openings.
F. Sub-floor reference markers indicating cut points for holes, drains or additional openings are repeated identically on opposing flooring surface using chalk or other non-permanent marking.
G. Telephone, electrical duct covers or other such interruption of the floor will be installed with flooring material. Attention to overall continuity of color and pattern with surrounding flooring is applied. Edges of covers will adhere tightly to neighboring flooring material perimeter.
H. Wall board and corners to be installed using recommended adhesive for application. Seams to be heat welded with the recommended welding rod. Aluminum Edge Flashing (Cove cap) to be mechanically fastened to wall over top of wall board. A bead of non-sagging E-6100 adhesive to be applied to and along the top of cove cap. Stainless Steel Corner Edge Guards to be mechanically fastened on all outside corners.
I. All installation procedures for adhering floor covering material to substrates will comply with methods approved by BMI.
J. All permanent heat welds as indicated are applied following proper fitting of seams producing a surface flush with adjacent flooring material. All seams to be welded using thermoplastic welding rod as recommended by BMI. All floor seams to be seared (double strike) upon completion of heat welding.
K. Drain holes to be cut in floor material. All stainless steel drains rings and transition strips are inlaid and secured using stainless steel screws and lead anchors following New Construction Checklist.
L. Upon partitioned install completion, area is weight rolled using a 150 pound flooring roller from central point outward to perimeter eliminating air pockets and evenly distributing adhesive beneath material. In areas where a floor roller is impractical for use, then this task will be done by hand, pressed firmly in place with flat bladed instrument or hand roller.
M. Warranty: Appropriate installation warranty to be issued by BMI Installs, Inc. based on type of installation and/or service contract.

CLEANING AND PROTECTION

A. The following operations are to be performed immediately following installation of floor coverings:
    1. Excess adhesive and any visible surface blemishes are removed using method recommended by BMI.
    2. Floor should be swept or vacuumed prior to cleaning with a water or chemical solution.
    3. Commercial degreaser is recommended to thoroughly clean black marks, and soil from construction operations prior to store open date.
    4. Protect flooring from damage for the duration of construction following completed installation. It is recommended flooring be covered in heavy plastic or paper felt to avoid marring, indentation, cuts or tears due to equipment placement or construction operations still to be completed.

NOTE: The biggest cause of dirt/grease is allowing the cleaning solution and water to dry on the floor service.

INSTALLATION PROCEDURES

This documentation of procedures and techniques provides our customers with both visual and detailed explanations of the proper process used when installing BMI Tuff-Trac® Titan Thermoplastic Flooring. The installation procedures, customizations and fabrications contained herein are considered proprietary information to BMI and should be regarded as confidential.

PRIOR TO JOB

BMI Installs recommends that relative humidity testing be performed on all concrete substrates before installation. The humidity must be no more than 85% within the concrete slab before installation of Titan flooring.

1. The floor substrate needs to be clean and dry. Using a wet/dry shop vacuum, remove all dust from all corners, door jams and surfaces before laying out Titan sheet flooring.

2. Inspect all floor areas where Titan is going to be installed for holes, dips, and uneven areas–especially close to floor sinks, trench drains, pipes and different penetrations in the substrate. Grind down all uneven areas to a level finish that is even with the substrate. Patch all holes and level all areas before installation of the flooring. All excessive floor patch work and preparation should be addressed with the Contractor or Owner before beginning because it may require a change order from the original signed contract. Drains, floor sinks and trough drains should be at 1/8" above substrate with proper slope towards them.

3. Cut wall base using sheets long ways into 11" wide by 8' long. Standard wall base of 6" high is achieved by using a fixed base router on the rear side of the sheet material 6" in. Set the router depth at 1/8" and check depth of cut; ensure that your router cut is correct before you cut the entire length of the sheet. Once the cut has been created, the sheet can bend to build a gentle ninety degree angle from the floor to wall making the correct cove base angle. This strip will be 6" up the wall and 5" out on the floor.

4. Use a 1/8" square-notch trowel to evenly spread two part epoxy, "glue" 6" up walls and 5" on floor to install the wall base. Use hand roller to insure a tight seal.

5. Measure the area to be installed to see the best way to run material. Once started, the sheets should run the same direction.

6. Doorways, drains and different penetrations will need to be marked and cut out.

7. Material is routed out where sheet edges meet to accept the V-Rod weld material.

8. Using heat welding tool with V-Rod tip and welding rod, apply pressure to melt rod into routed area created.

9. Use a quarter moon knife or spatula for trimming off the excess weld to a smooth finish.

10. Once trimming is completed, a second pass with the heat welding tool will need to be done at a higher heat. This is called striking and will smooth out any imperfections.

INSTALLATION PROCEDURES

11. Fold welded sheets back half way to start the two part epoxy gluing procedures. Use a 1’8” in. square-notch trowel to spread the glue evenly. Fold or roll sheets back over glue and repeat on other half.

12. After gluing each side down, use your 150 lbs. roller to push all air pockets out to assure firm contact with the glue and the substrate.

13. Now you can heat weld the flooring to the wall base with same heat welding procedure.
14. Run a 1/4” bead of E-6100 over the top of the wall base and install the trim piece on top of the wall base. Hammer drill and screw 1-1/2” stainless steel screws every two feet along trim.
15. All trim is to be sealed with E-6100 sealer. Use a small amount on top of the trim to prevent water penetration.
16. Heavy grade stainless steel corner brackets are installed on each outside corner that received the wall base. This is to protect the corners from equipment and carts being bumped into them.

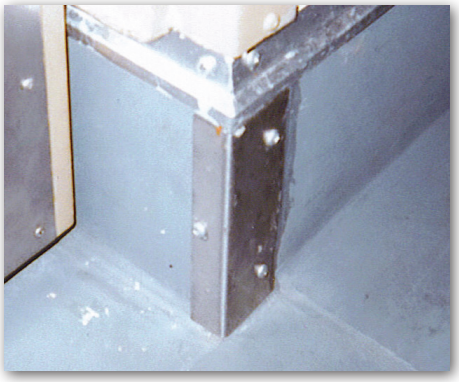

17. Recess drain, floor sinks and floor clean out covers. After cutting a small hole where the cover is to be re-installed place the cover down and directly over the drain. Mark around the cover and cut out a circle/ square just big enough to make sure that the drain hole isn't obstructed. Mark where drain ring will be installed and use plunge router to set thickness of drain ring, usually 1/8". Clean shavings and install drain rings using E6100 sealant, 1-1/2" lead anchors and 2" stainless steel screws.

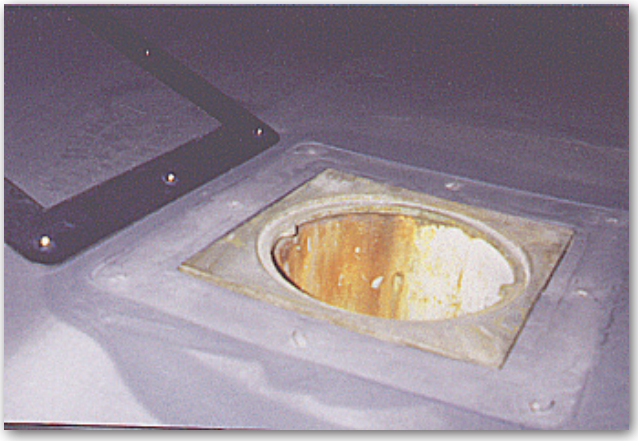

18. Should there be trough drains present, they are cut, fitted and permanently sealed. BMI custom fabricates stainless steel flat bars the size of the drain.

19. At all locations where the Titan flooring meets another kind of material such as concrete or tile a 14 gauge stainless steel transition/threshold is installed. Cut the material dry lay and drill mounting holes. Set lead anchors into substrate and install using E-6100 sealant into holes and along all edges of transition. Clean all excess sealant.

20. Thoroughly walk job site and inspect all areas of floor with supervisor.

INSTALLATION PROCEDURES

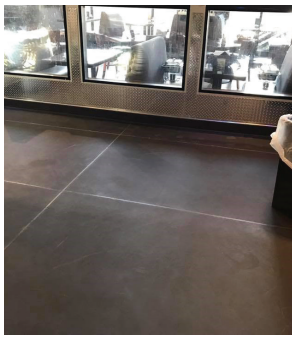

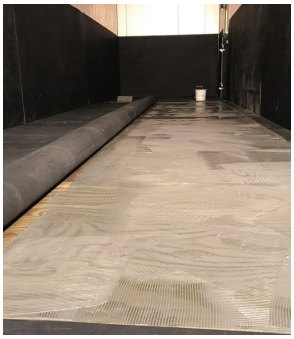
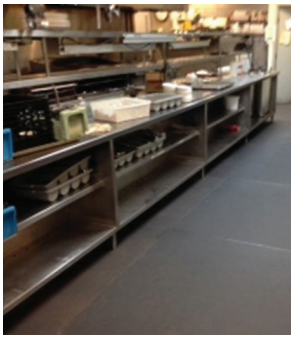
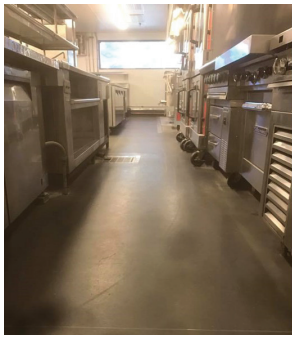
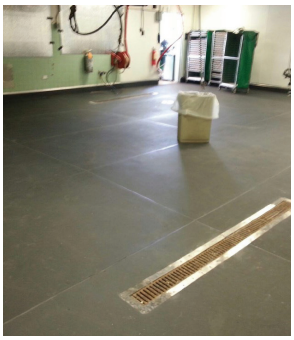
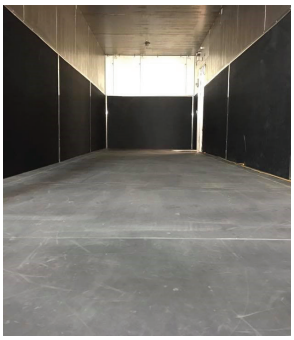

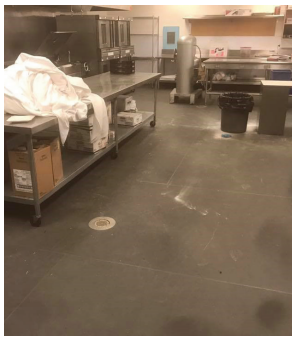

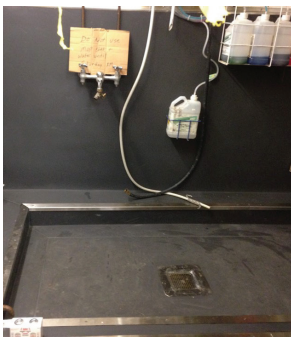

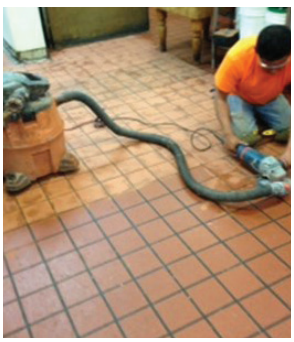
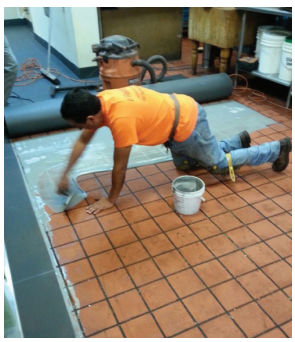

COVE BASE / CORNER DETAIL

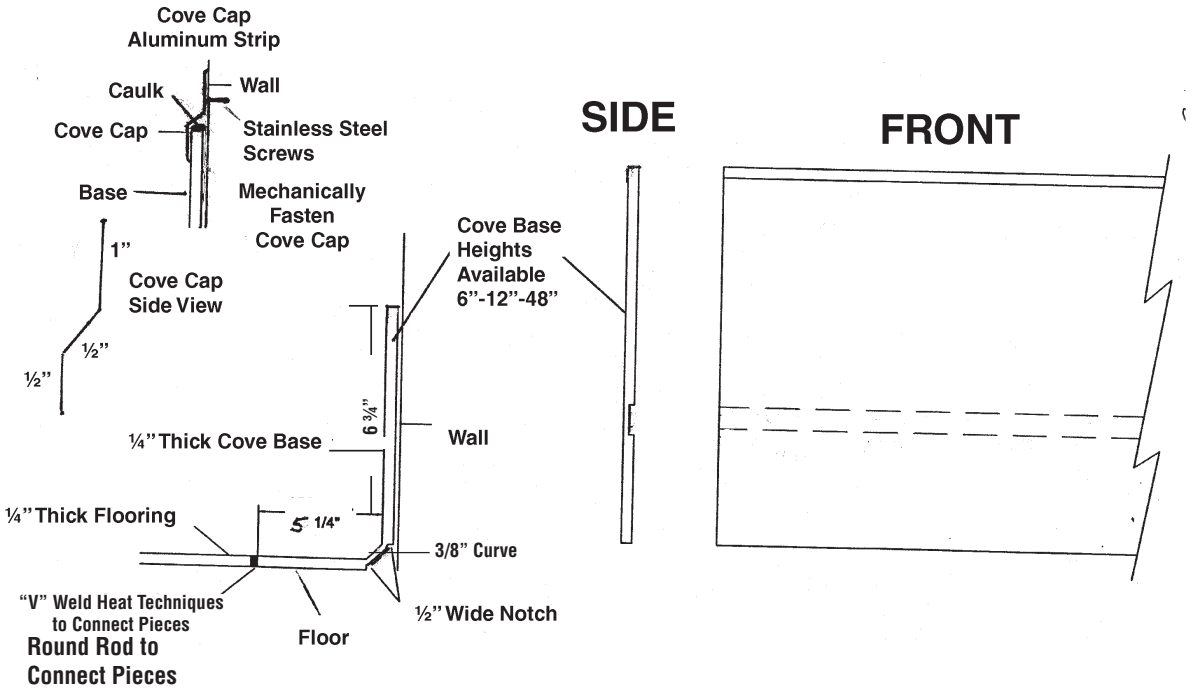

NOTE: 2.70 ROUND / 54" COVE BASE IS USED IN SINK AND PREPARATION AREAS WHERE NEEDED.

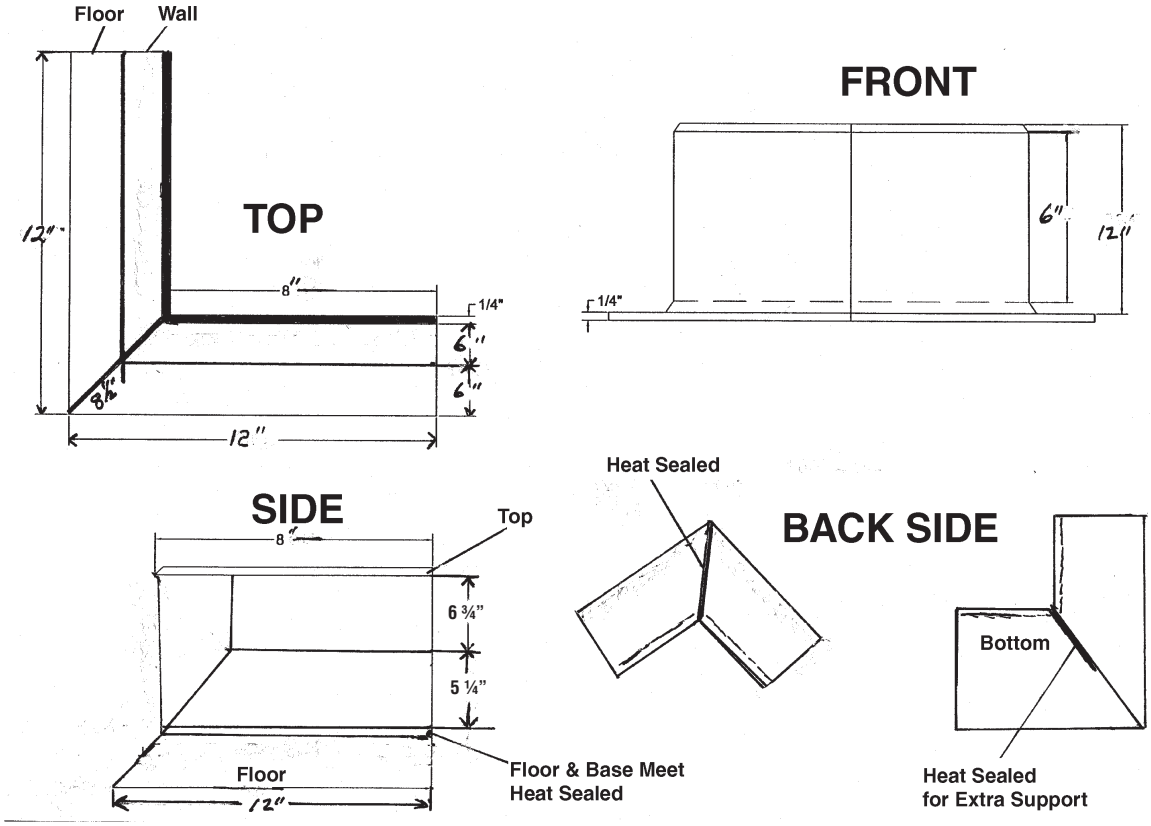

STANDARD DRAIN DETAIL

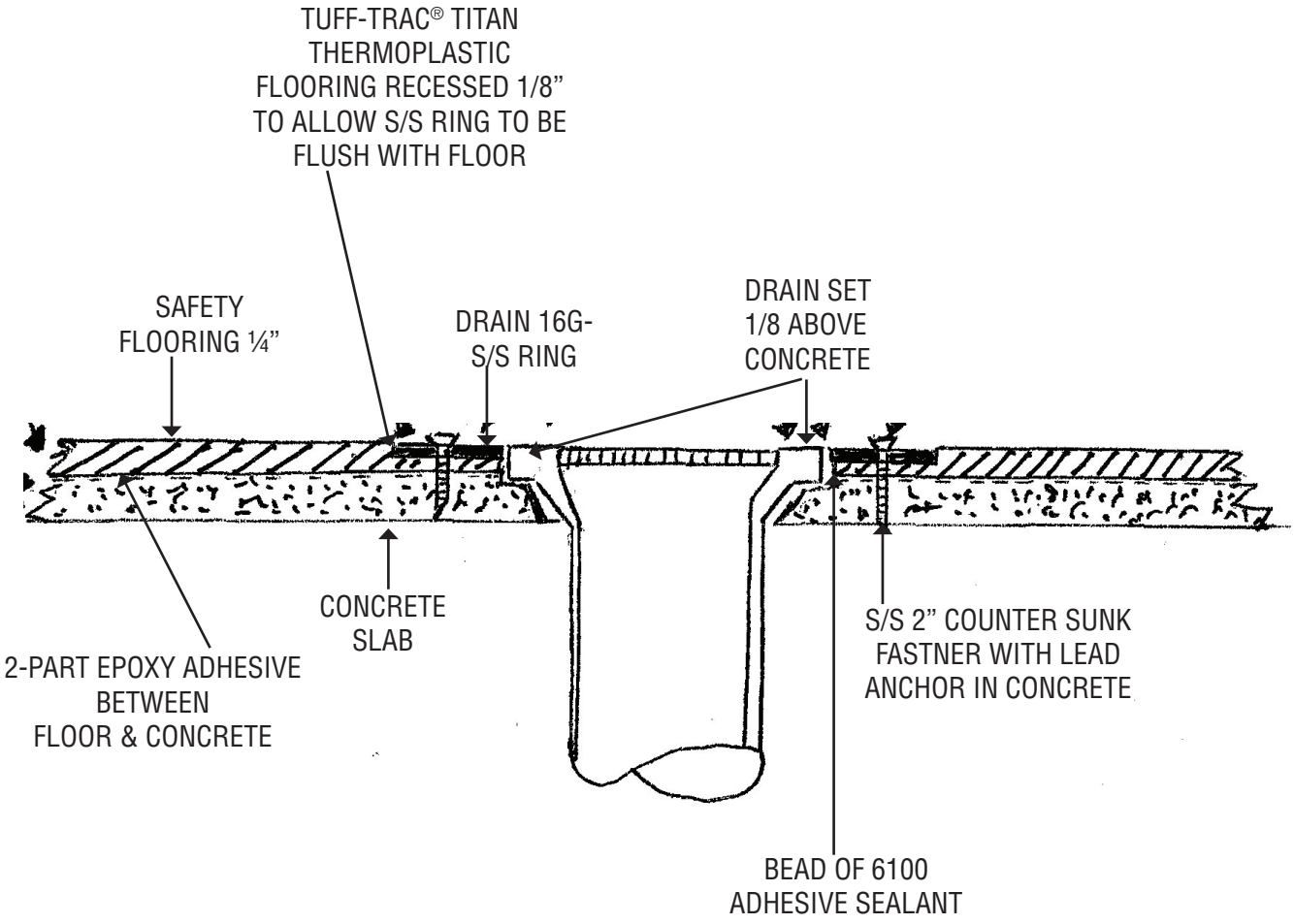

STANDARD FLOOR DRAIN DETAIL

SECOND LEVEL ILLUSTRATION

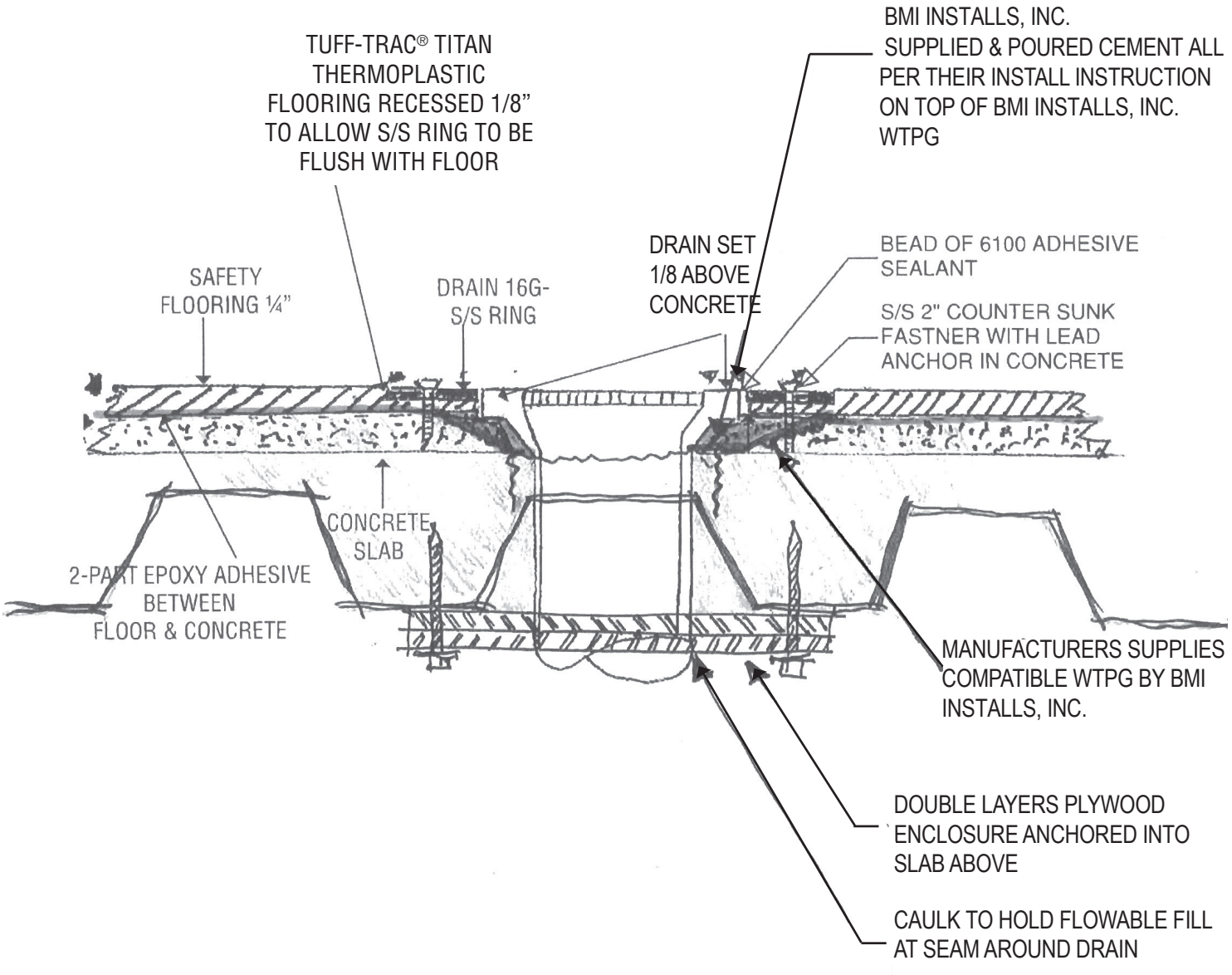

STANDARD FLOOR SINK DETAIL

SECOND LEVEL ILLUSTRATION

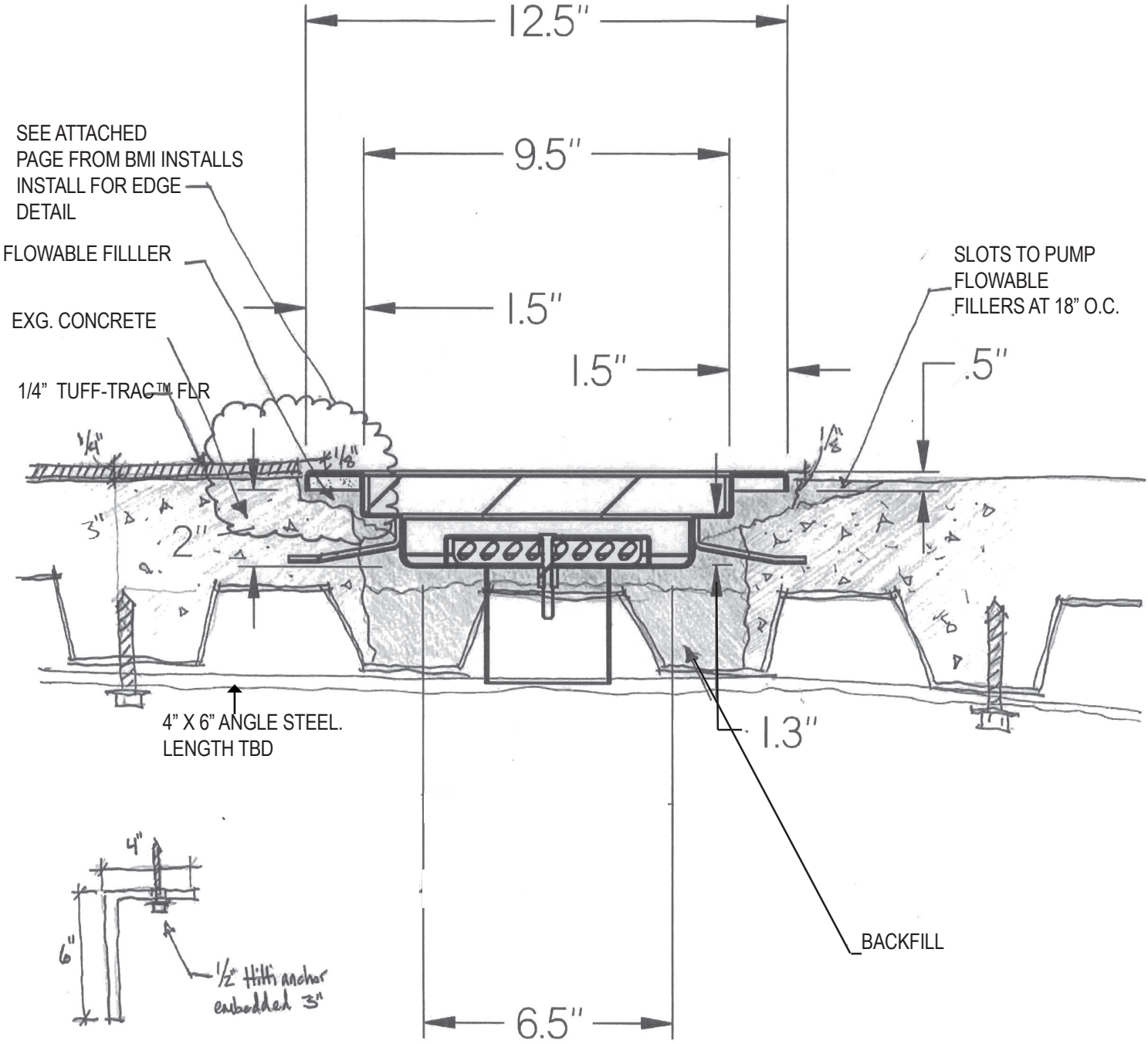

SCALE 1.5" = 1'-0"

NEW CONSTRUCTION CHECKLIST
TUFF-TRAC® TITAN THERMOPLASTIC SAFETY FLOORING

All items must be completed prior to the arrival of the flooring installation crew
Customer is defined as the end user, corporate offices, general contractor or 3rd party contractor responsible for performing checklist items.

_____ **SUBSTRATE CONDITIONS:**

1) BMI Installs recommends that relative humidity testing be performed on all concrete substrates before installation. The humidity must be no more than 85% within the concrete slab before installation of Tuff-Trac® Titan Thermoplastic flooring
2) If concrete slab is over 85% humidity a FlexPrime moisture barrier would need to be applied first.
3) Substrate should be graded (sloped) to drains as necessary to meet local health department requirements.
4) Concrete floors must be level, except for drain slope as required, and cleared of debris and equipment.
5) A minimum depth of 3"- 4" of concrete around all drains to ensure screw anchors installed are permanently set into the substrate.
6) The substrate is to be completely "scarified" before the flooring crew arrives. "Scarifying" is defined as:
    a. Concrete is finished, not smooth, allows proper adhesive bond, is level and does not required grinding of cured concrete by the BMI Inc. crew.
    b. Substrate is to be cleaned completely of dirt, debris, adhesive or other particulates left by other trades which will interfere with the flooring adhesive bond.
    c. BMI Inc. does not perform floor prep on construction sites and this work is not included in the proposal. **BMI Inc. bills prep work at a rate of $50/hour/man.** Should the customer request that BMI Inc. perform scarifying, patching or other prep work, a change order for time and materials will be submitted and must be signed and returned prior to the work being done.
7) The use of mud set is NOT recommended. Contact BMI Inc. directly for requirements and approvals if mud set is being utilized/specified.
8) BMI Inc. is not responsible for bad substrate conditions. Substrate problems that arise after the completion of the flooring installation will not be covered under warranty.

_____ **INSTALLATION AREA:**

1) Must be fully enclosed and water tight.
2) Roof and walls must be fully constructed and secure

NEW CONSTRUCTION CHECKLIST (CONTINUED)

_____ **DRAINS:**

1) Must be clearly visible, accessible and free of debris.
2) All square, round and trough floor drains are to be installed 1/8" above substrate level to accommodate flooring material.
3) A minimum depth of 3"- 4" of concrete must be poured around the drains.
4) Are to be installed horizontal to substrate height i.e.: drains should not be installed at an angle to floor surface.
5) Please make sure the plumber finishes any concrete if backfilling after the slab is poured. See item 6a under Substrate Conditions.
6) Are to be in working order and drain properly.
7) All drain covers and accompanying hardware must be present and undamaged.

_____ **WALL CONDITIONS:**

1) Walls must be completely enclosed.
2) Sheetrock should be fully installed extending to substrate level.
3) FRP must be fully installed and extend to the substrate level.
4) Ceramic tile walls must be completely installed and extend to the substrate level.
5) Stainless walls are to be completely secured.

_____ **DOORS:**

1) Door frames must be completely installed
2) Doors in areas of new floor installation should be installed to allow for a minimum of ½" to accommodate flooring material and stainless transition.

_____ Coolers & Freezers: (if specified for installation)

1) Must be fully assembled and installed.
2) Must be water tight and completely sealed.
3) Concrete floor surfaces must meet minimum requirements above for substrate conditions.
4) Should not be operated 48 hours prior to or immediately after new floor installation.
5) BMI Inc. is not responsible for cooler/freezer door adjustments. They will need to be raised ½ to ¾ inch to accommodate the flooring and/or plywood if specified.

_____ **BAR AREAS:** (if specified for installation)

1) Bars should be completely installed prior to flooring installation.
2) All hookups should be **9" above substrate level.**

_____ **PLUMBING:**

1) Plumbing installation must be completed prior to the arrival of the flooring crew.
2) Plumbing and equipment pipe connections are to be disconnected and capped prior to the commencement of flooring installation.

NEW CONSTRUCTION CHECKLIST (CONTINUED)

_____ **GAS LINES:**

1) Are to be installed 9" above substrate level.
2) Are not to be anchored to flooring after flooring completion or floor warranty may be voided.

_____ **WASTE REMOVAL:**

1) Customer must provide adequate waste removal containers (dumpsters) for flooring materials and debris to be removed from the job site.

_____ **WATER ACCESS:**

1) Hot (if available) and cold water access with standard water hose connections.

_____ **POWER ACCESS:**

1) Electrical power dedicated to flooring crew and available during flooring installation with a minimum of 3 separate 20 amp electrical outlets required.
2) A power generator or generators meeting the above requirements must be provided by the customer if adequate building power is not available.

_____ **SITE ACCESS:**

1) Customer will insure BMI Inc. installation crew has unrestricted access to the job site as scheduled
2) Customer must notify BMI Inc. a minimum of 48 hours in advance should there be site access limitations.

_____ **MATERIAL DELIVERY:**

1) Based on start date of installation, customer may be asked to take delivery of and unload all flooring materials including:
    a) Safety flooring material, weld & adhesives.
    b) Stainless steel fixtures and accessories.

(A weekend start date may require a coordinated effort between customer and BMI Inc. for material delivery. Trucking companies will not deliver on weekends & holidays).

_____ **STORAGE:**

1) Safety Flooring material is to be laid flat while stored. The material has some memory and should not be folded or bent.
2) Safety Flooring material, stainless fixtures, adhesives and accessories are to **be stored in a dry and secure location**.
3) Customer will provide secure storage area for BMI Inc. materials.
4) Product loss or damage, once materials arrive at the job site, is the responsibility of the customer.

NEW CONSTRUCTION CHECKLIST (CONTINUED)

_____ **CONTACT LIST:**

1) Customer will provide BMI Inc. with a written contact list and point of contact authorized to sign any change orders a minimum of 2 weeks prior to project start.
2) Contact list will include:
   a) General contractor phones & address
   b) Project manager (including cell phone #)
   c) Job superintendent (including cell phone #)

_____ **ASSESSMENTS:**

1) Assessments, if incurred, are billed at a rate of $50.00 per hour per man to a maximum of $1000.00 per day.
2) Assessments may be incurred for the following:
   a) Customer has not met construction checklist items prior to arrival of the flooring crew causing a delay in job start.
   b) Construction project is behind schedule and customer does not notify BMI Inc. of need to reschedule a minimum of 6 days prior to arrival of flooring crew.
   c) If material is in transit prior to the customer notifying BMI Inc. of schedule delays; the customer will be required to take delivery of materials and/or pay reshipping/storage fees.

_____ **NOTIFICATION:** Customer will advise all parties involved with the project, (i.e. Contractors, vendors, store management, facilities, maintenance, building security, etc .) of the items listed on this checklist, scheduling and their individual responsibilities and possible project delay assessments.

_____ **SPECIAL CONSIDERATIONS:** BMI Inc. is to be advised in writing of special considerations or unusual requirements on the job site prior to acceptance of proposal (quotation) such as:

1) Labor union concerns
2) Freight delivery& unloading restrictions
3) Building security
4) Parking restrictions
5) Site access restrictions

(failure to disclose any of the above special considerations prior to acceptance of proposal by both parties will subject proposal to be null and void requiring a new proposal be submitted for acceptance).

NEW CONSTRUCTION CHECKLIST (CONTINUED)

Following installation completion:

a) The floor should be covered with craft paper or comparable material to insure other trades do not grind dirt/debris into the floor.

b) If the floor is not covered and requires cleaning; pressure washing of the floor may be necessary.

c) Should the floor be damaged prior to delivery/turnover of the job; BMI Inc. should be contacted immediately to schedule repair.

I, the undersigned, fully understand the requirements as stated above and agree to the terms as specified. I also understand that any conditions not met above may cause additional costs to be assessed and borne by the undersigned. My signature below acknowledges that I am authorized to enter into such agreement and accept full responsibility for checklist items.

Company: _____

Accepted by: _____*(print)* *Position:* _____

Signature: _____ *Date:*_____

New construction checklist must be signed and returned to BMI Inc. prior to full acceptance of proposal (quotation) by BMI Inc. and before the flooring installation can be scheduled and work can commence.

REMODEL CHECKLIST

All items must be completed prior to the arrival of the flooring installation crew. Customer is defined as the end user, corporate offices, general contractor or 3rd party renovations contractor responsible for performing checklist items.

_____ **Renovation Contractors and Dealers:**

1) The customer will insure the contractor arrives on the job site on time
2) The customer will insure the contractor has been advised of the scope of their responsibilities.
3) The customer will insure the contractor has been advised of the job schedule and must coordinate with flooring crew according to flooring installation requirements.
4) The customer will insure that their contractor has been advised of any possible assessments.

_____ **Substrate Floor Condition:**

1) Substrate is to be graded (sloped) towards drains as necessary to meet local health department requirements.
2) Customer is to have a **minimum of 200 sq. ft. prepped** and ready for the crew to install on a nightly basis to ensure the project remains on schedule.
3) Project delays, due to incompletion of checklist items, will incur assessment for labor, hotels & per diem.
4) **All concrete work**, including the setting of drains, **is to be finished** (not rough or uneven).
5) Existing flooring materials are to be removed, patched or repaired as specified.
6) Substrate is to be level, except for drain slope, clean and cleared of any debris.
7) Existing floor tile must be removed and patched with a patching approved compound.
8) Tile wall base must be removed and any floor and wall gaps filled with a patching approved compound.
9) Epoxy floors must be removed according to approved specifications.
10) Customer is responsible for insuring the substrate is sound and will not compromise the integrity of the installed flooring system.
11) BMI Inc. is not responsible for bad substrate conditions. Substrate problems that arise after the completion of the flooring installation will not be covered under warranty.

_____ **Drains:**

1) Square, round and trough floor drains are to be **adjusted to 1/8" above substrate level** to accommodate flooring material.
2) A minimum of 4 square feet of floor tile around all floor drains must be removed and the exposed area patched with a patching approved compound to accommodate the 1/8" drain height as required above.
3) Are to be installed horizontal to the substrate. Drains should not be installed at an angle to the floor surface posing a potential trip hazard.
4) Are to be in working order and drain properly.
5) All drain covers and accompanying hardware are to be present and undamaged.

REMODEL CHECKLIST (CONTINUED)

_____ **Wall Conditions:**

1) Walls and supports must be free of damage, moisture or rot and/or completely repaired prior to the arrival of the flooring crew.
2) Walls must be **completely enclosed to substrate level** and FRP or stainless walls fully installed and secured prior to the arrival of the flooring crew.

_____ **Coolers & Freezers:** (if specified for installation)

1) **Must be shut down 48 hours** in advance of flooring installation to allow adequate condensation dry time.
2) Must be emptied of all contents, including racks and shelving, prior to the arrival of the installation crew.
3) Alternate refrigeration procurement is the responsibility of the customer.
4) Units must remain off during floor installation. Units may be turned back on and brought up to temperature immediately following the completion of the installation.
5) Wheeled conveyances should not be utilized inside unit for a minimum of 72 hours after floor installation completion.

_____ **Bar Area:** customer will insure bars are emptied of all contents (including glassware, liquor and supplies, etc) and are free of debris prior to arrival of flooring installation crew.

_____ **Equipment Moving:**

1) Equipment (all trades) must be disconnected/reconnected and removed completely from areas specified for install on a nightly basis by the customer.
2) Equipment manufacturer warranties are the responsibility of the appropriate equipment.
3) Not responsible for proper operation of equipment before, during or after flooring installation.

_____ **Connections:** Plumbing and equipment pipe connections are to be disconnected and capped prior to the commencement of flooring installation.

_____ **Plumbing Condition:** Damaged or corroded plumbing, valves, drain covers, connections, pipes, etc are to be replaced by the customer prior to the commencement of flooring installation.

_____ **Soda Vendors:** Should be scheduled by the customer/contractor/undersigned 2-4 weeks prior to flooring installation.

_____ **Door Adjustments:**

1) Back door & cooler/freezer unit doors (if specified for installation) are to be adjusted a minimum of 1/2” to 3/4” to accommodate Safety Flooring and/or decking as required for stainless transitions.
2) If original substrate floor level is raised or lowered the customer is responsible for providing an adequate surface for wall base installation and insuring the door frames/jambs are sealed water tight prior to the installation of wall base or custom stainless door jamb extensions.

REMODEL CHECKLIST (CONTINUED)

_____ **Waste Removal:** Customer will provide an adequate waste removal container (dumpster) for flooring materials and debris removed from the project site.

_____ **Water Access:** Customer will insure both hot and cold water access with standard water hose connections for the duration of the flooring installation.

_____ **Power Access:** Customer will insure an adequate building power source with three 20 amp outlets and access to breaker box for the duration of the installation. Breaker box is to be left unlocked unless a responsible party is on site during the installation.

_____ **Site Access:** Customer will insure installation crew has unrestricted access to the job site from the close of each business day until 8:00am the following morning unless otherwise scheduled and accepted in advance.

_____ **Contact List:** Customer will supply complete written list of contact information, including cell phone #'s, for all parties involved in the project including contractors, construction project managers and superintendents, vendors, store management, facilities, maintenance, building security, and customer point of contact as required for change orders.

_____ **Assessments:**

1) If construction checklist items have not been completed by the customer/contractor/ undersigned upon arrival of the flooring crew, the customer will be assessed at a rate of $50.00 per hour per man to a maximum of $1000 per day for any project delays.
2) If the customer is unable to provide the preparation of reasonable flooring area ready for install (minimum of 200 sq. ft.) per night an assessment of $345.00 per day for additional hotel, per diem and truck fees.

_____ **Notification:** Customer will advise all parties involved with the project, (i.e. Contractors, vendors, store management, facilities, maintenance, building security, etc.) of the items listed on this checklist, scheduling, their individual responsibilities and possible project delay assessments.

_____ S**ecurity:** Customer will contract for security personnel if required. This should be scheduled and confirmed in advance of the arrival of the flooring crew.

_____ **Material Delivery, Receipt & Storage:**

1) Based on start date of installation, customer may be asked to receive delivery of and unload all flooring materials and accessories. Trucking companies do not deliver on weekends or holidays. Requesting a weekend or holiday start date may require the customer take delivery and unload materials before the arrival of the flooring crew.
2) The customer will provide secure storage. Material is to be stored laid flat in a dry, secured area.
3) Customer is responsible for any loss or damage to flooring material and accessories after delivery receipt.

REMODEL CHECKLIST (CONTINUED)

_____ **Special Considerations:** Must be advised in writing of special considerations or unusual requirements on the job site prior to arrival of the flooring installation crew such as:

1) Labor union concerns
2) Freight delivery& unloading restrictions
3) Building security
4) Parking restrictions
5) Site access restrictions

(Failure to disclose any of the above special considerations (particularly union labor requirements) prior to acceptance of proposal by both parties will subject proposal to be null and void requiring a new proposal be submitted for acceptance).

I, the undersigned, fully understand the requirements as stated above and agree to the terms as written above. I also understand that any conditions not met above may cause additional costs to be assessed to and borne by the undersigned. My signature below acknowledges & certifies that I am authorized to enter into such agreement and accept checklist responsibilities for my company.

Customer Company Name: _____

Project Name: _____

Project Address: _____

Accepted by: _____ *(print)*

Position/Title: _____

Signature: _____

*Date:*_____

Remodel construction checklist must be signed and returned to prior to full acceptance of proposal (quotation) and before the flooring installation can be scheduled and/or started.

CHEMICAL AND FOOD RESISTANCE BASED ON ASTM D-543

- Aluminum Chloride
- Ammonium Hydroxide
- Ammonium Chloride
- Ammonium Nitrate
- Ammonium Sulfate
- Amyl Acetate
- Aniline
- Animal Fat
- Benzoic Acid
- Bleach
- Borax
- Butyric Acid
- Butyl Acetate
- Calcium Chloride
- Calcium Hydroxide
- Calcium Hypochlorite
- Chicken Fat
- Chromic Acid
- Citric Acid
- Copper Sulfate
- Detergent Solution
- Diglycoic Acid
- Diethyl Phthalate
- Dilute Sodium Hydroxide
- Dilute Sulfuric Acid
- Dimethyl Phthalate
- Ethyl Alcohol
- Fluboric Acid
- Formaldehyde
- Furnace Residue
- Gasoline
- Glyoaxl
- Hydrogen Peroxide
- Incinerator Ashes
- Kerosene
- Lacquer Spray Paint
- Latex Paint
- Lactic Acid
- Malic Acid
- Masonry Cleaner
- Methyl Alcohol
- Milk
- Mineral Oil
- Mineral Spirits
- Muriatic Acid
- Naphtha
- Napthalene
- Oleic Acid
- Perchloroethylene
- Phosphoric Acid
- Phthalic Acid
- Polyethylene
- Polypropylene
- Potassium Chloride
- Sodium Hydroxide
- Sodium Hypochlorite
- Soft Drinks
- Succinic Acid
- Tannic Acid
- Triacetin
- Trichloroacetic Acid
- Trichloroethylene
- Triethonolamine
- Triethylene Glycol
- Zinc Chloride
- Zinc Nitrate

OTHER USES

- Production Rooms
- Mechanical Rooms
- Electrical Rooms
- Laundry Rooms
- Wash Down Rooms
- High Traffic Aisles
- Walk-in Coolers
- Snack and Vending Areas
- Work/Production Stations
- Secondary Containment
- Ramps and Hallways
- Locker and Restroom Areas
- Warehouse and Storage Areas
- Commercial Kitchen and Preparation Areas (With State/Federal Approval)
- Behind and Around Bar Areas
- Wait Stations
- Cooklines
- Dishwasher Areas
- Laboratories
- Entrances
- Mud Flaps
- Truck Bedliners
- Automobile Service Areas
- Livestock Areas
- Livestock Trailers
- Dog Pens and Runs
- Shower Areas
- Weight Rooms
- Aerobics Flooring
- Walking/Jogging Paths
- Work Bench Tops
- Tennis Courts
- Universal Gym/Basketball Flooring
- Swimming Pool Walk Areas
- Boat Decks and Docks/Dock Bumpers
- Ice Skating Rinks
- Roller Skating/Roller Blading Rinks
- Work Mats/Anti-Fatigue Mats
- Temporary Gym Floor Protection
- Snowmobile/Utility Trailers
- Old Concrete Covering
- Ramps/Walkways for Disabled/Handicap (Meets ADA Requirements)
- Sound Stages/Movie Studios and Amusement Parks

WARRANTY

Our warranties are the best in the business, and we stand proudly behind our flooring product!

- 3 year Retrofit Flooring Installation Warranty
- 5 year Retrofit Cooler/Freezer Floor Warranty
- 5 year New Construction Floor Installation Warranty
- 10 year New Cooler/Freezer Floor Warranty

3 year Retrofit Flooring Installation Warranty

5 year Retrofit Cooler/Freezer Floor Warranty

WARRANTY

5 year New Construction Floor Installation Warranty

10 year New Cooler/Freezer Floor Warranty

REFERENCES

University of Georgia
UGA Food Services
Facilities Manager
Sammy Johnson
706-340-2411
Email: sammyj@uga.edu

Charles Pace & Associates
430 Senoia Road
Fairburn, GA 30213
Chuck Pace
678-296-1222
Email: pace.chuck@gmail.com

Carolina Marketing, Inc.
130-A Wing Hill Drive
Lexington, SC 29172
Benji Berry
803-240-7797
Email: benjiberry@carolinamarketinginc.com

DCS, Inc.
316 Maxwell Road, Suite 400
Alpharetta, GA 30009
Jerry Sutton
404-410-899
Email: jerry@dcsusa.net

Darden Restaurant Group
1000 Darden Center Drive
Orlando, FL 32837
Shawn Tidwell
407-739-8313
Email: STidwell@darden.com

Clemson University
Dir. of Housing & Dining Maintenance
University Housing & Dining
Anthony Harvey
864-643-6175
Email: Harvey8@clemson.edu

Dunes Club Resort
710 East Fort Macon Road
Atlantic Beach, NC 28512
252-726-6444
Peter S. Johnson
Email: gmgr@dunes-club.com

Hamco
300 Village Green, Suite 200
Lincolnshire, IL 60069
Graham Allen
224-217-0993
Email: ghallen@eggharborcafe.com

RECOMMENDED UNDERLAYMENT SPECS.

Rapid Set®

CEMENT ALL®

HIGH STRENGTH, NON-SHRINK GROUT
Multi-Purpose Repair Material

Highlights:

- ***FAST***
  Sets in 15 minutes; structural strength in 1 hour
- ***STRONG***
  3 times stronger than most concrete
- ***DURABLE***
  Formulated for long life in critical applications
- ***EXCELLENT BOND***
  Superior adhesion to concrete, stone, brick, block, stucco and more
- ***STRUCTURAL***
  For repair and new construction
- ***MULTI-PURPOSE***
  Use for concrete repair, grouting, anchoring, casting, underlayment and more

PRODUCT NAME:
Rapid Set® CEMENT ALL®

DESCRIPTION: Rapid Set CEMENT ALL is a high-performance, fast-setting, multi-purpose concrete repair material and non-shrink grout. Durable in wet environments, CEMENT ALL is a blend of Rapid Set hydraulic cement and specially graded fine aggregates. CEMENT ALL is non-metallic and no chlorides are added. Mix CEMENT ALL with water to produce a workable, high quality material that is ideal where rapid strength gain and high durability are desired. CEMENT ALL sets in 15 minutes and achieves structural strength in 1 hour.

RECOMMENDED USE: Use CEMENT ALL for general and structural concrete repair, doweling and anchoring, industrial grouting, formed work, vertical and horizontal trowel applications. CEMENT ALL is ideal for airport, highway, industrial and marine applications.

ENVIRONMENTAL ADVANTAGES: Use CEMENT ALL to reduce your carbon footprint and lower your environmental impact. Production of Rapid Set cement emits far less CO_2 than portland cement. Contact your representative for LEED values and environmental information.

APPLICATION: Apply CEMENT ALL in thicknesses from featheredge to 4" (10 cm). For heavy loads and vehicle traffic, minimum thickness will vary. Not intended for high heat applications above 300°F. For deeper sections, use Rapid Set® Mortar Mix or Rapid Set® Concrete Mix. For overlay applications, a minimum one test section should be prepared to evaluate the suitability of the materials and procedures.

SURFACE PREPARATION: For repairs, application surface shall be clean, sound and free from any materials that may inhibit bond, such as oil, asphalt, curing compound, acid, dirt and loose debris. Roughen surface and remove all unsound material. Apply CEMENT ALL to a surface that is thoroughly saturated with no standing water.

MIXING: The use of a power-driven mechanical mixer, such as a mortar mixer or a drill-mounted mixer, is recommended. Organize work so that all personnel and equipment are in place before mixing. Use clean potable water. **CEMENT ALL may be mixed using 3 to 5 quarts (2.8 to 4.7 L) of water per 55-lb (25-kg) bag. Use less water to achieve higher strengths. Do not exceed 5 quarts (4.7 L) of water per bag.** For increased fluidity and workability, use Rapid Set® FLOW Control® plasticizing admixture from the Rapid Set® Concrete Pharmacy®. Place the desired quantity of mix water into the mixing container. While the mixer is running, add CEMENT ALL. Mix for the minimum amount of time required to achieve a lump-free, uniform consistency (usually 1 to 3 minutes). Do not retemper.

RECOMMENDED UNDERLAYMENT SPECS.

CEMENT ALL®

HIGH STRENGTH, NON-SHRINK GROUT
Multi-Purpose Repair Material

PLACEMENT: Rapid Set® CEMENT ALL® may be placed using traditional construction methods. Organize work so that all personnel and equipment are ready before placement. Place, consolidate and screed quickly to allow for maximum finishing time. Do not wait for bleed water. Apply final finish as soon as possible. CEMENT ALL may be troweled, floated or broom finished. On flat work, do not install in layers. Install full-depth sections and progress horizontally. Do not install on frozen surfaces. Use a method of consolidation that eliminates air voids. To extend working time, use Rapid Set® SET Control® set retarding admixture or cold mix water. CEMENT ALL may be applied in temperatures ranging from 45°F to 90°F (7°C to 32°C).

CURING: Water cure all CEMENT ALL installations by keeping exposed surfaces wet for a minimum of 1 hour. Begin curing as soon as the surface starts to lose its moist sheen. When experiencing extended setting time due to cold temperature or the use of retarder, longer curing times may be required. The objective of water curing shall be to maintain a continuously wet surface until the product has achieved sufficient strength.

COLD WEATHER: Environmental and material temperatures below 70ºF (21ºC) may delay setting time and reduce the rate of strength gain. Lower temperatures will have a more pronounced effect. Thinner sections will be more significantly affected. To compensate for cold temperatures, keep material warm, use heated mix water and follow ACI 306 Procedures for Cold Weather Concreting.

WARM WEATHER: Environmental and material temperatures above 70ºF (21ºC) may speed setting time and increase the rate of strength gain. Higher temperatures will have a more pronounced effect. To compensate for warm temperatures, keep material cool, use chilled mix water and follow ACI 305 Procedures for Hot Weather Concreting. The use of SET Control set retarding admixture will help offset the effects of high temperatures.

YIELD & PACKAGING: CEMENT ALL is available in 55-lb, 25-lb and 10-lb (25-kg, 11.3-kg, and 4.5-kg) sizes. One 55-lb (25-kg) bag of CEMENT ALL will yield approximately 0.5 cu ft.

SHELF LIFE: When stored in a dry location, in an undamaged package, CEMENT ALL has a shelf life of 12 months.

USER RESPONSIBILITY: Before using Rapid Set products, read current technical data sheet, bulletins, product label and material safety data sheet at www.ctscement.com. It is the user's responsibility to review instructions and warnings for any Rapid Set product in current technical data sheet, bulletins, product label and material safety data sheet prior to use.

WARNING: DO NOT BREATHE DUST, AVOID CONTACT WITH SKIN AND EYES. Use material in well-ventilated areas only. Exposure to cement dust may irritate eyes, nose, throat, and the upper respiratory system/lungs. Silica exposure by inhalation may result in the development of lung injuries and pulmonary diseases, including silicosis and lung cancer. Seek medical treatment if you experience difficulty breathing while using this product. The use of a NIOSH/MSHA-approved respirator (P-, N- or R-95) is recommended to minimize inhalation of cement dust. Eat and drink only in dust-free areas to avoid ingesting cement dust. Skin contact with dry material or wet mixtures may result in bodily injury ranging from moderate irritation and thickening/cracking of skin to severe skin damage from chemical burns. If irritation or burning occurs, seek medical treatment. Protect eyes with goggles or safety glasses with side shields. Cover skin with protective clothing. Use chemical resistant gloves and waterproof boots. In case of skin contact with cement dust, immediately wash off dust with soap and water to avoid skin damage. In case of skin contact with wet concrete, wash exposed skin areas with cold running water as soon as possible. In case of eye contact with cement dust, flush immediately and repeatedly with clean water and consult a physician. If wet concrete splashes into eyes, rinse eyes with clean water for at least 15 minutes and go to the hospital for further treatment.

PROPOSITION 65 WARNING: This product contains chemicals known to the State of California to cause cancer and birth defects or other reproductive harm.

Please refer to the MSDS and www.ctscement.com for additional safety information regarding this material.

PHYSICAL DATA

Set Time, ASTM C191 Mod.**	
Initial set	15 minutes
Final set	35 minutes
Compressive Strength, ASTM C109 Mod.**	
1 hour*	3000 psi
3 hours	5000 psi
1 day	6000 psi
7 days	7000 psi
28 days	9000 psi
Slant Shear Bond, ASTM C882 Mod.**	
1 day	1500 psi
28 days	2500 psi
Splitting Tensile, ASTM C496 Mod.**	
7 days	700 psi
28 days	880 psi
Flexural Strength, ASTM C78 Mod.**	
7 days	600 psi
28 days	800 psi

*After final set
**Data obtained at flow consistency 102 by ASTM C1437
All data produced at 70°F (21°C)

RECOMMENDED UNDERLAYMENT SPECS.

FlexPrime Moisture Vapor Barrier

DESCRIPTION: FlexPrime, a moisture barrier, is a two-component, modified polymer based material, used as a penetrating bond agent and sealant for concrete, wood, steel aluminum, vinyl, fiberglass, stainless, painted surfaces and many more. It's special molecular attachment and penetration into the substrate, gives it the ability to act as a barrier against moisture from below, while sealing the topside surface. FlexPrime has even halted the migration of hydrostatic head pressure on floors. The amount of hydrostatic pressure can vary considerably, so caution should be taken with the proper initial testing, when this type of repair is needed. FlexPrime should not be used in standing water, but a damp surface is acceptable. It has even been used as a block coat to repair "green concrete," one day old. This normally requires a 28-day cure before repairing.

FlexPrime, also is a superior sealer against outgassing, when installing flooring systems over concrete, while promoting greater adhesion on a damp surface. Further, FlexPrime can be used over steel with tightly adhered rust, to halt the advancement of corrosion. Any loose rust particles may be blasted or mechanically cleaned prior to sealing with FlexPrime. This surface can then be painted upon tack, lending itself as a very superior undercoat or prime coat.

APPLICATION: FlexPrime is packaged in equal parts of A & B. Measure out the total amount needed to cover the surface, and combine equal parts of part A and part B. With a power mixer, blend the two parts for approximately one to two minutes, or until a "buttery" color is obtained. In colder weather longer mixing will help generate heat so that the "tack" time will be shortened. FlexPrime may be rolled or brushed onto the surface. General, a very smooth, thin coat should be obtained, and no ridges or puddles should be left on the surface.

PHYSICAL DATA:

- Solids by volume -100%
- Recommended spread rate @ approx 150-300 sq. ft per gallon will yield 5-10 mils.
- Mix Ratio - 1:1 by volume
- Flash Point - >200°F (93°C)
- Weight Per Gal. (mixed) - 8.8lbs (4kg)
- Shelf Life Unopened containers @ 77°F (25°C) 12 months.
- Tack Free to touch 4-6 hrs. @ 77°F (25°C)
- Pot Life 10-15 min. @ @ 77°F (25°C)
- Power mix with jiffy mixer or standard paint mixer for a minimum of 1 minute.
- One coat system to apply, VDC compliant, little or no odor, allows flooring to be replaced within 3 to 6 hours depending on room temperature.
- Unaffected by a PH 2-11.5
- Moisture Vapor Transmission ASTM (E96 - 80 perms) Test Method 8.8 lbs (4kg)
- 100% cohesive failure substrate. Concrete usually pulls off between 300 and 600 psi, on metal surface usually 2000psi and dolli glue failure.
- FlexPrime can be applied to green concrete 7 days old, making the surface available for flooring within 1 to 3 hours or until full tack.

TECHNICAL DATA SHEET

PO Box 1387
Cary, NC 27512
919-740-2949

E6100® Non-Sag Formula

Industrial Adhesives

PRODUCT DESCRIPTION

E6100® is a unique NON-SAG, non-flammable industrial adhesive formulated to meet high-performance requirements. It permanently adheres to more surfaces than virtually any other adhesive, providing exceptional adhesion to wood, metal, glass, fiberglass, ceramics, masonry, concrete, asphalt, leather, rubber, PVC, neoprene, vinyl and many plastics. This NON-SAG formula will not drip or run and is highly recommended for use in applications requiring vertical hold. E6100 maintains its flexible bond in extreme cold temperatures, will not crack or become brittle and is excellent for bonding items subject to vibration. For applications exposed to direct sunlight, paint over E6100 after curing.

WHERE TO USE / APPLICATIONS

- counter top assembly
- cracks in vertical brick & mortar
- HVAC systems
- leaking containers/pipes
- locking down fasteners against vibration
- seams in trailers
- installing and securing building signs
- wall paneling
- roof flashing/shingles
- garage door assemblies
- auto upholstery/paneling/molding and much more!

FEATURES AND BENEFITS

EASY TO USE –10.2 fl oz cartridge fits into standard cartridge gun
FLEXIBLE – does not become brittle in cold weather and bonds items subject to vibration
CHEMICAL RESISTANT – safe for applications exposed to dilute acids and dilute caustics
ABRASION RESISTANT – great for bonding objects subject to normal wear
WATERPROOF – can be submerged in fresh and salt water after complete cure
PAINTABLE – paint to match surrounding area or make UV resistant

TECHNICAL INFORMATION

NON-SAG Viscosity

UNCURED PROPERTIES		CURED PROPERTIES	
Color:	Clear & Black	Chemical resistance:	Excellent to water, dilute bases
VOC:	2.0 grams/liter	Hardness:	80 Shore A
Solvent:	Perchloroethylene	Dielectric strength:	400V/mil (ASTM D-149); this is the maximum voltage that can be applied to a given material without causing it to break down
Non-flammable:	Yes		
Density:	11.0 +/-0.1 lbs/gal		
Solids:	30% by weight, 40% by volume		
Viscosity:	Non-sag	Tensile strength:	3800 lb/in^2 (ASTM D-412)
Tack time:	~ 4 minutes	Elongation:	900% (ASTM D-412)
Full cure time:	Thin film: 24 hours Thick film: 48-72 hours	Service temperature:	-40 to 150 °F (-40 to 66 °C)
Storage:	Store in dry area between 50 and 80 °F (10 and 27 °C)		
Freeze/thaw stability:	Stable, allow product to warm to room temperature before using		
Shelf life:	2 years (unopened)		

BMI installs,inc.

PO Box 1387
Cary, NC 27512
919-740-2949

ADHESION TEST – Average values, 180° peel, ASTM D 903					
ABS	32 pli	Acrylic	36 pli	Aluminum	35 pli
Cement/Brick	25 pli	Glass	34 pli	Leather	20 pli
Neoprene	32 pli	Polycarbonate	37 pli	PVC	38 pli
Rubber	30 pli	Steel	45 pli	Tile	25 pli
Urethane	32 pli	Wood	40 pli		

CHEMICALS THAT HAVE LITTLE OR NO EFFECT ON E6100®

Acetic acid (5% and 10%)
Ammonium hydroxide (3.4%)
Ammonium nitrate (50%)
Antifreeze
Beer (3.2% alcohol by volume)
Boric acid (3.1%)
Distilled water
Hydraulic oil
Lactic acid (3.8%)
Milk (fresh, tested at 40 °F)
Motor oil (30w)
Nitric acid (10% and 20%)
Oxalic acid (3.1%)
Phosphoric acid (30% and 60% as P_2O_5)
Potassium hydroxide (3.4%)
Sodium carbonates (2.7%)
Sodium chloride (10%)
Sulfuric acid (3% and 10%)
Wine (20% alcohol by volume)

E6000 exhibits excellent resistance to water, dilute acids and dilute bases. Thin films of E6000 were immersed in various chemicals for two weeks and exhibited weight gains of less than 2% and tensile strength loss of less than 10%. These chemicals are listed on the left. All percentages are given by weight unless otherwise noted.

CHEMICALS THAT DESSOLVE E6100®

Chevron solvent 1100
Chlorothane NU
Cyclohexane
Gasoline
Methylene chloride
Perchloroethylene
Propyl acetate
Toluene
1, 1, 1-Trichloroethane

These are common solvents that dissolve E6000 when hardened samples were immersed. The dissolution with these solvents was not instantaneous and therefore does not preclude usage in all cases. Applications were an occasional splash or brief exposure is expected may be acceptable. Test a small area before full use.

HEALTH and SAFETY

This product contains perchloroethylene. Before working with this product, read and become familiar with information concerning hazards, proper use and handling. MSDS is available on line at: eclecticproducts.com/msds/e6100_english_clear.pdf; to request a hard copy of the MSDS, please send an e-mail to msds@eclecticproducts.com or call 800.333.9826.

LIMITED WARRANTY

The product is warranted against any defect in materials or workmanship under normal use and service for a period of 180 days after the date of purchase. The product is also warranted under any implied warranties provided under applicable state law, including, without limitation, the implied warranty of merchantability and the implied warranty of fitness for a particular purpose, for a period of 180 days after the date of purchase. This warranty covers only the original buyer of the product. For warranty service, the buyer should contact the store where the product was purchased, or write Eclectic Products, Inc., P.O. Box 4450, Pineville LA 71360 or call 800.767.4667. This warranty gives you specific legal rights, and you also have other rights, which vary from state to state.

BMI Installs, Inc.

D. BROCK INDUSTRIES

PO BOX 1387, Cary, NC 27518 · 1-800-518-6298

Epoxy Flooring Adhesive 2 Part System 106

Part A & Part B

Solvent Free
No VOC Formula

For the Installation of Thermoplastic, Elastomeric Vinyl and Rubber Flooring Materials

Contents: 0.90 Gallons Part A & B Combined

Directions for use:

*106 Epoxy Adhesive consists of two parts, Part A and Part B (hardener). Combine Part A and Part B and mix thoroughly for three to five minutes until mixture obtains a light grey color with no streaks. For best results drill missing with a jiffy blade is recommended. If hand mixing, periodically scrape the walls and bottom of container to avoid unmixed material which will result in soft spots after curing.
*Maximum adhesion is obtained when surfaces to be bonded are free of oil, grease, rust and other contaminants. For hard to bond surfaces use conventional surface preparation methods. Adhesives will not cure if not thoroughly clean of dust and moisture. Pour entire contents of adhesive on sub-floor immediately after mixing and spread immediately with a 1/32" X 1/32" X 1/16" notched trowel.

Do not let mixture stand in container. Do not mix more material than you are able to apply in one step.

*Roll and cross-Roll with 150lb carpet roller within 30 minutes after flooring is installed. Use hand roller in areas which cannot be reached with a larger roller. Check within 1-2 hours after installing flooring material and if any air bubbles still exist, repeat rolling method again.
*Remove any WET adhesive immediately from the surface of the flooring and surrounding area with a cloth dampened with isopropyl alcohol, xylene, or mineral spirits. ADHESIVE CANNOT BE REMOVED AFTER IT HAS SET.
*Avoid heavy traffic over finished floors for at least 12 hours after installation.
*Spreading capacity 95 square feet per gallon.

Features

*This material does not contain any VOC's. Product has excellent moisture, humidity and chemical resistance and bonds to a variety of substrates.
Excellent for bonding to non-porous substrates also.
Mixing 1:1 Ratio

Keep Out of Reach of Children

Limited Warranty

D.Brock Industries gives no warranty, express or implied, and all products are sold upon condition that purchasers will make their own tests to determine the quality and suitability of the product. D.Brock Industries shall be in no way responsible for the proper use and service of the product. Actual properties are dependent on curing conditions and degree of cure. Information or suggestions given are without warranty of any kind and purchasers are solely responsible for any loss arising from the use of such information or suggestions. No information or suggestions given by us shall be a recommendation to use any product in conflict with any existing patent rights.

Certified Installers with Nationwide Coverage

BMI installs,inc.

Tuff-Trac® Titan Thermoplastic Flooring

Master Installation Contractor

PO Box 1387
Cary, NC 27512
919-740-2949
www.bmiinstalls.com